THE DYNAMIC WAY.

Technische Tekening /
Technical drawing

RVS Handdoekhaakjes / Stainless steel towelhooks

THE DYNAMIC WAY.

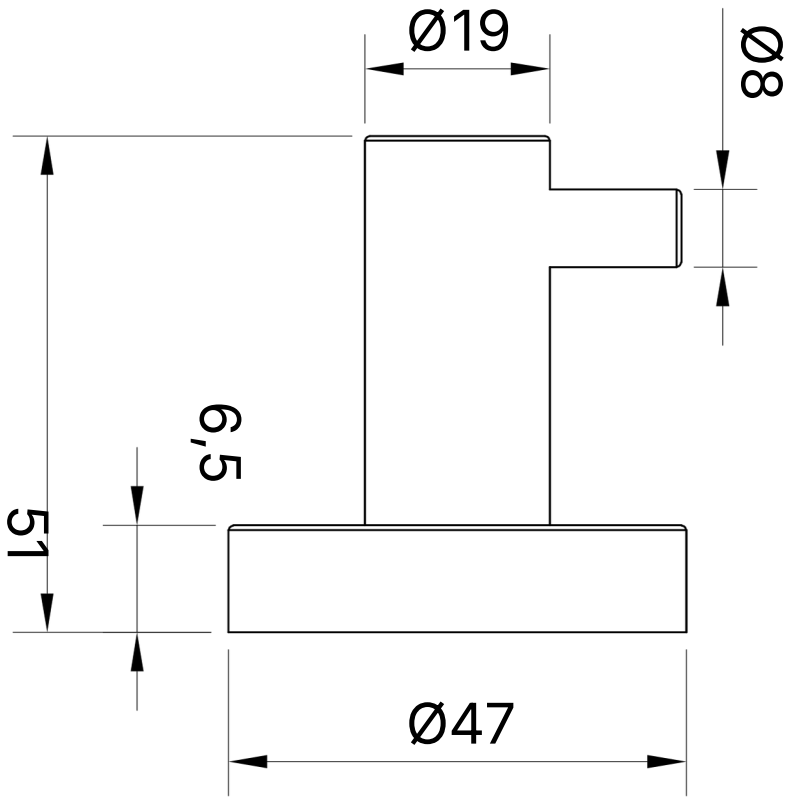

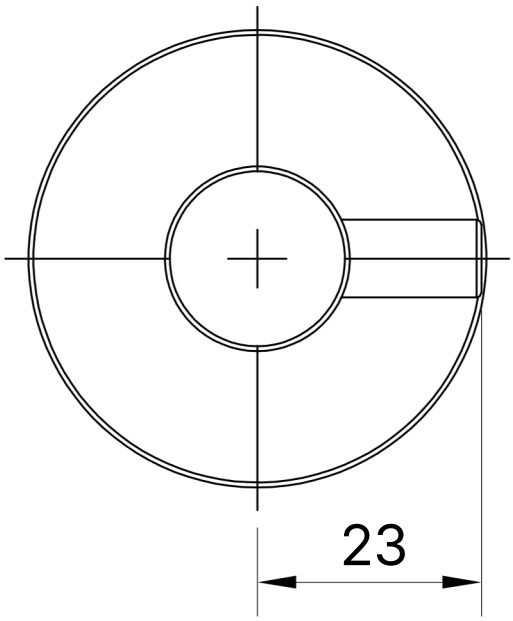

Scan me

Installatie video / Technical drawing